MODEL NO.	PACKAGING
134-1000-000	ONE PCS PER BAG

REV	ECO	DATE
001	ECO-17-0032	11/28/2017

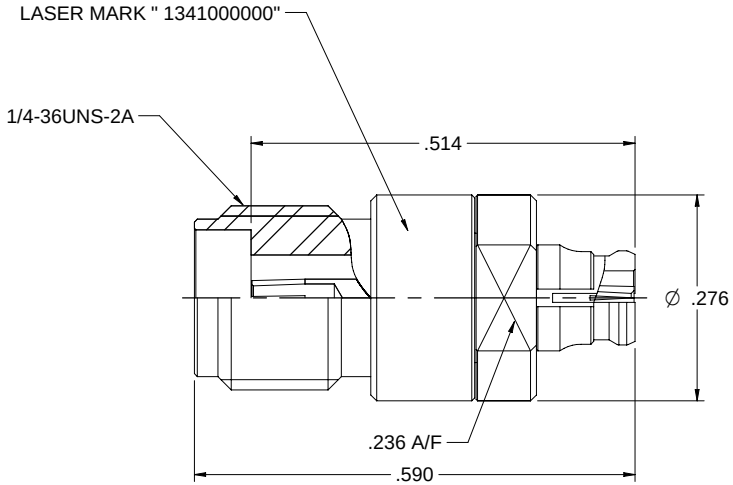

NOTES: UNLESS OTHERWISE SPECIFIED

1. MATERIAL & FINISH:
   1.1 BODY: PASSIVATED STAINLESS STEEL
   1.2 CONTACT PIN, RING & CONTACT BODY: GOLD PLATED BERYLLIUM COPPER
   1.3 INSULATOR: PEEK NATURAL

2. ELECTRICAL:
   2.1 IMPEDANCE: 50 OHMS
   2.2 FREQUENCY RANGE: 0-40 GHz
   2.3 VOLTAGE STANDING WAVE RATIO: 1.25 MAX
   2.4 DIELECTRIC WITHSTADING VOLTAGE: 500 VRMS MIN
   2.5 CONTACT RESISTANCE:
      2.5.1 CENER CONTACT: 6 MILLIOHM MAX
      2.5.2 OUTER CONTACT: 2 MILLIOHM MAX
   2.6 INSULATOR RESISTANCE: 5000 MEGOHM MIN

3. MECHANICAL:
   3.1 ENGAGEMENT FORCE: FULL DETENT 68 N MAX, LIMITED DETENT 45 N MAX, SMOOTH BORE 9 N MAX (SMP)
   0.23 NM MAX (SMK)
   3.2 DISENGAGEMENT FORCE: FULL DETENT 22 N MIN, LIMITED DETENT 9 N MIN, SMOOTH BORE 2.2 N MIN (SMP)
   0.23 NM MAX (SMK)
   3.3 CONTACT RETENTION: 22N MIN
   3.4 DURABILITY: 500CYCLES MIN (SMK)
   FULL DETENT 100 CYCLES MIN, LIMITED DETENT 500 CYCLES MIN, SMOOTH BORE 1000CYCLES MIN (SMP)

4. ENVIRONMENT:
   4.1 THERMAL SHOCK: MIL-STD-202, METHOD 107, CONDITION B.
   4.2 OPERATING TEMPERATURE: -55TO 125°C
   4.3 SALT SPRAY: MIL-STD-202, METHOD 101, CONDITION B
   4.4 SHOCK: MIL-STD-202, METHOD 213, CONDITION I
   4.5 VIBRATION: MIL-STD-202, METHOD 204, CONDITION D
   4.6 MOISTURE RESISTANCE: MIL-STD-202, METHOD 106

cinch connectivity solutions
THIS PROPRIETARY DOCUMENT is property of Cinch Connectivity Solutions. Reproduction, distribution, and utilization, and communication of its contents without understanding that it is not to be used for manufacture or sale is prohibited without written permission.
INTERCHANGE DRAWING IS ACCEPTABLE AS PER SAE AS8003 TYPE II (USA)

Model No. 134-1000-000		Johnson
RoHS2 ☑ 2011/65/EU	Cage Code	Title: ADAPTER ASSEMBLY, SMK (2.92mm) JACK TO SMP JACK
UNLESS OTHERWISE SPECIFIED UNITS INCH	3RD ANGLE PROJECTION	Drawing No. 134-1000-000 — Rev. 001
.XXX ±.02 .XXXX ±.01 ANGLES ±5°	Drawn By: Betty.Yu	
	Date: 10/10/2017	Size C — DO NOT SCALE DRAWING — Workmanship Std NONE — Sheet 1 of 1