Alle Rechte vorbehalten/ *All rights reserved*

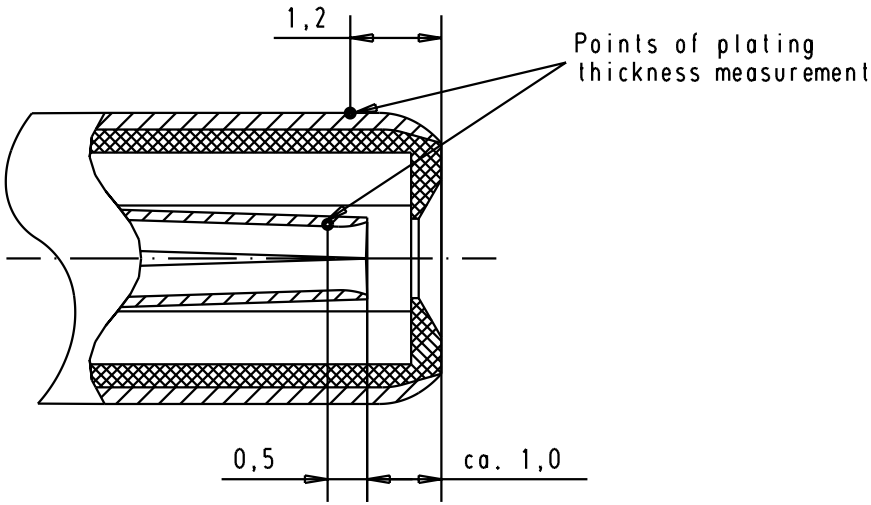

X (Scale 10:1)

harnessing dimensions

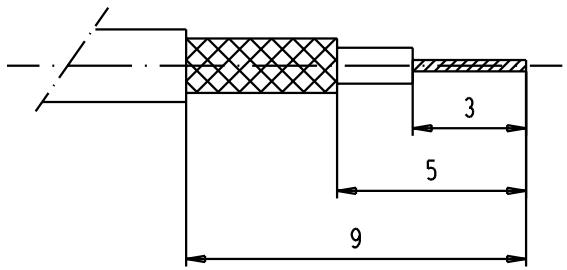

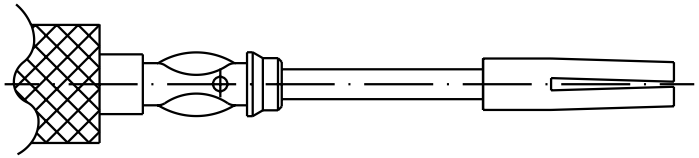

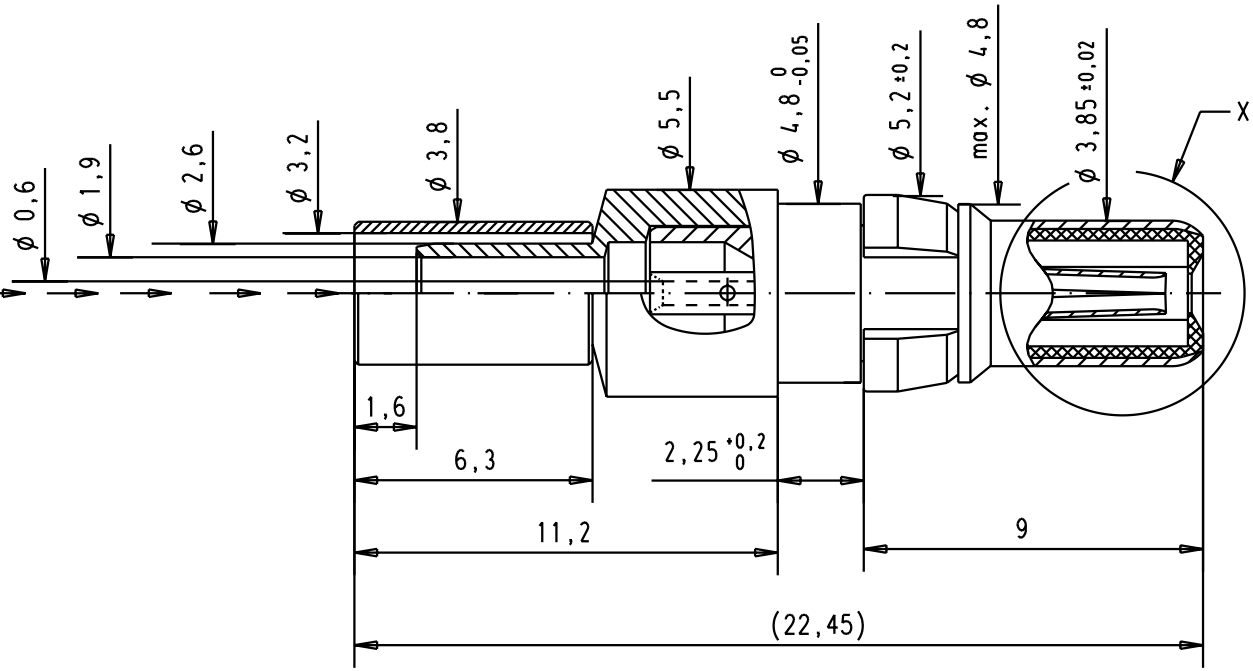

crimping tool of outer conductor:
hand tool: 09 99 000 0503 00
die: 09 99 000 0508 00 cavity B
with cables: RG179BU, RG187AU

crimping tool of inner conductor:
hand tool: 09 99 000 0501 00
die: 09 99 000 0507 00
with cables: AWG24, AWG26, AWG28, AWG30

Part number	Plating	outer conductor	inner conductor	Mod.	Dat.	Name
09692827230	Mating area	0,2 µm Au	0,2 µm Au			
	Termination area	5 µm Sn	0,2 µm Au			
09692825230	Mating area	0,8 µm Au	1,3 µm Au			
	Termination area	0,2 µm Au	1,3 µm Au	31057	21-JUN-02	CV

	Dat.	Name
Detail.	21-JUN-02	CV
Insp.		
Stand.		

All Dim. in mm
Orig. Size DIN A 4

Male coaxial contact, 75 Ohms straight cable terminaison, inner and outer conductor for crimp termination

Maßstab/ *Scale* 5:1

HARTING EURL
F-95972 Paris

TB 09 69 282 x230

Sub.

Blatt/ *Page* 1/1